Africa bar stool 48x45x94’5

by Eugeni Quitllet

Vondom’s Africa furniture collection, designed by Eugeni Quitllet, captures the essence of simplicity and originality. With pieces that combine beauty and functionality, Africa is ideal for those looking for elegant and comfortable outdoor furniture. “The simplest things are the most original… The most original thing is to be simple…”, declares the designer, encapsulating the philosophy of this collection.



Info

Description

Made of gas air moulding injected polypropylene with fiber glass. Stackable. Available in several colors. Item suitable for indoor and outdoor use.

Weight: 5.14 Kg

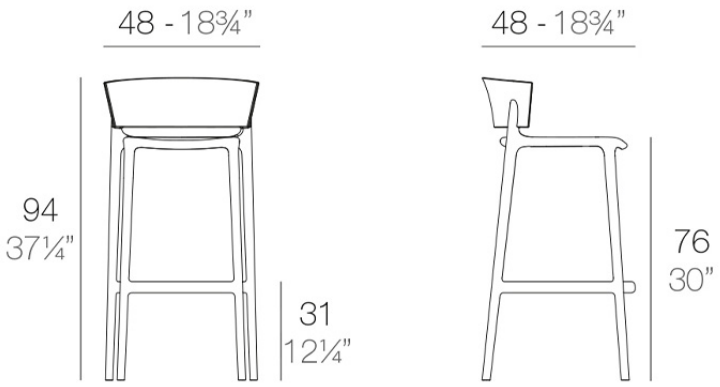

AFRICA Taburete Alto 94
AFRICA Bar Stool 37¼”

VONDOM

Finishes

finishes

Basic
Ref. 65029


white


black


ecru


clay


tortora

Available in various colors

fabric

BAIONA
Ref. 65029CO


brown 10108 baiona


garnet 10107 baiona


black 10114 baiona


clay 10106 baiona


gray 10113 baiona


camel 10104 baiona


blue 10112 baiona


cream 10103 baiona


ocean 10111 baiona


tortora 10102 baiona









ecru 10101 baiona green 10110 baiona white 10100 baiona jade 10109 baiona

Group 1C. High density 100% acrylic fabric, which provides a solid feel. It has an irregular pattern that adds a handcrafted touch.

CALELLA
Ref. 65029CO


anthracite 10129 calella


ecru 10121 calella


gray 10128 calella


white 10120 calella


blue 10127 calella


jade 10126 calella


clay 10125 calella


mustard 10124 calella


cream 10123 calella


tortora 10122 calella

Group 1C. PFAS-free 100% acrylic fabric with a rich and unusual texture and an exceptional sofness, which enhances the comfort of the furniture.

FISTERRA
Ref. 65029CO


cream 10132 fisterra


white 10130 fisterra


ecru 10131 fisterra


tortora 10135 fisterra


camel 10134 fisterra


peach 10146 fisterra


clay 10137 fisterra


brown 10136 fisterra


olive 10145 fisterra


jade 10139 fisterra


green 10140 fisterra


ocean 10141 fisterra


blue 10142 fisterra


gray 10143 fisterra


anthracite 10144 fisterra


black 10147 fisterra

Group 1C. 100% acrylic fabric, with a distintive irregular marbled pattern and a soft feel.

PORTONOVO
Ref. 65029CO


black 10165 portonovo


garnet 10157 portonovo


clay 10156 portonovo


anthracite 10164 portonovo


mustard 10155 portonovo


gray 10163 portonovo


camel 10154 portonovo


blue 10162 portonovo


ocean 10161 portonovo


cream 10153 portonovo


green 10160 portonovo


tortora 10152 portonovo


jade 10159 portonovo


ecru 10151 portonovo


brown 10158 portonovo


white 10150 portonovo

Group 1A. 100% acrylic fabric, with a flat and simple design, which adapts to any decorative style.

ALTEA
Ref. 65029CO


tortora 1102 altea


white 1100 altea


camel 1120 altea


clay 1122 altea


garnet 1106 altea


brown 1104 altea


jade 1125 altea


ocean 1123 altea


gray 1101 altea


anthracite 1124 altea


black 1105 altea

Group 1A. Soft outdoor fabric with leather-like texture.

AROUSA
Ref. 65029CO


tortora 1209 arousa


camel 1230 arousa

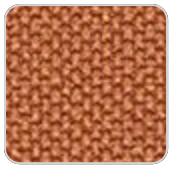
clay 1231 arousa


brown 1214 arousa

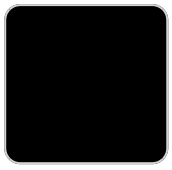
jade 1235 arousa


gray 1208 arousa


anthracite 1210 arousa

Group 1B. Soft outdoor fabric with shiny finish.

Ambients



















































